LUX
rACK SOLUtiONS

INTEGRATED SMART RACK SOLUTIONS

INTEGRATED SMART RACK SOLUTIONS

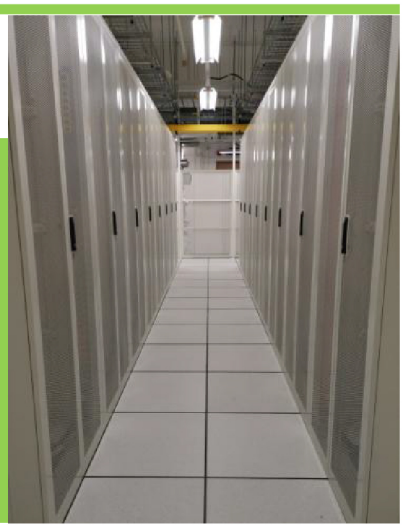

Being the IT rack manufacturer and solutions provider, we offer a brand-neutral smart rack solutions with a comprehensive range from electronic door access control system, intelligent PDU to environmental sensor systems for Datacom & Telecom market .

We also partner with Raritan for providing easy-to-deploy, economical network security and environmental monitoring system.

- IT RACK
- SMARTLOCK – DOOR ACCESS CONTROL
- EMX SMART RACK CONTROLLER

IT RACK

FEATURES

- Available in Floor Stand and Wall Mount
- Floor Stand: 12U, 15U, 19U, 21U, 22U, 32U, 37U, 42U, 45U, 47U, 48U, 50U, 52U and other tailor made
- Wall Mount: 2U, 4U, 9U, 12U, 16U and other tailor made
- Available in co-location racks
- 19" EIA/ECA-310 Standard
- Standard with over 70% Ventilation rate of Perforated Doors. Option with higher perforated rate
- Modular Design
- Integrated with Intelligent Lock, Smart Lock, Environmental Monitoring Systems and Sensors.
- Fully Integrated with Cabling and Cable Management Solutions
- Customization

SMARTLOCK

FEATURES

- Remote Lock/Unlock for Defined Users or Groups
- Synchronized Audit Trail and Access Timestamp
- Configurable Unlock Time Delay
- Customizable Alerting (Powered by Xerus)
- LED Status Indicator
- Event Logging
- Door Position, Proximity and Tamper Sensor
- Delivers Lock Status, Access Control Monitoring and Alarms
- Supports Compliance with PCI, SOX, SSAE 16, HIPAA, and EN50600

SMART RACK CONTROLLER

FEATURES:

Raritan's environmental rack controller is an IP-based appliance that allows you to use any of Raritan's sensors such as temperature, humidity, air pressure and airflow.

- Works with Raritan's Power IQR energy management software
- Up to 32 sensors per EMX2-111
- Up to 128 sensors per EMX2-888
- Wired or wireless network options
- USB camera option

BENEFITS:

Raritan's rack monitoring solution helps you manage the physical environment of your rack. With this solution and the appropriate sensors you can:

- Minimize the hours needed to track IT assets, thereby saving time and money
- Ensure uptime by monitoring racks for possible hot spots
- Save on cooling costs by confidently raising data center temperatures
- Maintain cabinet security with USB webcams and contact closure sensors
- Improve data center uptime by receiving environment alerts
- Optimize strategic and tactical decision making for the IT environment by tracking IT changes and growth in real time

Address: Unit 05, 12/F, Block A, Hi-Tech Industrial Centre, 5-21 Pak Tin Par Street, Tsuen Wan, N.T., HK

Tel : +852- 3618 9188 Fax: +852- 3590 9009 Website: www.lux-rack.com
Copyright Lux Rack Solutions Limited. All right reserved.

LUX RACK SOLUTIONS

Raritan
A brand of legrand

SMART RACK SOLUTIONS WITH RARITAN'S EMX SMART RACK CONTROLLER AND PLUG-AND-PLAY SENSORS

ELECTRONIC SWING HANDLE LOCK
The SML-KIT-1 can be placed at the front or rear of the rack to monitor cool air entering and/or hot air being expelled to ensure proper containment.

AIRFLOW
The DPX-AF1 can meter airflow in plenum space, such as under a raised floor or just above the perforated tiles.

AIR PRESSURE
The DPX-T1DP1 meters differential air pressure above and below a raised floor, or between hot aisles and cold aisles to prevent thermal leaks.

CONTACT CLOSURE
DX2-CC2 dual contact closure is used with third party sensors, and integrates with data center smoke detectors to monitor risky conditions and aggregate data through Raritan Xerus Platform

TEMPERATURE
The DPX2-T1 can be placed at the front or rear of the rack to monitor cool air entering and/or hot air being expelled to ensure proper containment.

VIBRATION
The DX-VBR detects vibrations such as earthquakes and damaged fans, along three axes (x, y, z).

WATER LEAK
The DPX-WSF-KIT, DPX-WSC-35-KIT, and DPX-WSC-70-KIT sensors monitor leaks on the floor, around an area, on liquid cooled racks, and can detect condensation.

RACK INLET TEMPERATURE AND HUMIDITY
The DX2-T3H1 strings together 3 sensor heads, making it easy to mount them at the bottom, middle, and top of the cool air inlet side as per ASHRAE2 guidelines.

Address: Unit 05, 12/F, Block A, Hi-Tech Industrial Centre, 5-21 Pak Tin Par Street, Tsuen Wan, N.T., HK

Tel : +852- 3618 9188 Fax: +852- 3590 9009 Website: www.lux-rack.com
Copyright Lux Rack Solutions Limited. All right reserved.

SMARTLOCK – DOOR ACCESS CONTROL

CABINET SECURITY STRAIGHT FROM YOUR PDU

Raritan's SmartLock is an electronic door access and control system that provides an easy to deploy and economical networked locking solution for data center enclosures. It is a universal solution that addresses evolving security requirements for IT applications and regulatory compliance from HIPAA, SOX, PCI DSS 3.2, or SSAE 16.

VENDOR AGNOSTIC COMPATIBILITY

The intelligent door sensor allows you to seamlessly connect, power, operate, and manage electronic handles from popular major rack access control manufacturers.

EASY TO DEPLOY / RETROFIT

The system can be easily deployed into any existing IT infrastructure because it doesn't require complex wiring between cabinets or to any security related equipment. For even faster deployment, the system has been pre-configured to be recognized by the PDU and uses standard sized handles and locks to reduce
initial setup time. When integrated with Power IQ DCIM Monitoring Software, it allows for an indisputable audit trail for simpler compliance and tracking.

COST EFFICIENT

Easily reduce cost by integrating the SmartLock system directly with PX PDUs or EMX Smart Rack Controller by eliminating the need for a dedicated IP drop, gateway, security panel, and home run wiring to the panels. The SmartLock system has an open architecture and API integrating with any security, DCIM, or BMS software system, helping to reduce cost by leveraging existing infrastructure.

SMART CARD COMPATIBLE

The SmartLock system is compatible with proximity card readers that use the following technologies: iClass®, MIFARE®, DESFire®, HID® Prox, Tag-it® and I-Code®. The smart card data is also secured by using the AES-128 encryption algorithm.

Product	Part Number	Package Description
SmartLock	SML-KIT-CARD-01	SML-KIT-01 contents + (1) USB Modular RFID Card reader, Compatible with high frequency 13.56MHz RFID cards including Legic®,my-d®, Tag-it® DESFire®, iClass®, MIFARE® and I-Code® technologies. USB cable included

Address: Unit 05, 12/F, Block A, Hi-Tech Industrial Centre, 5-21 Pak Tin Par Street, Tsuen Wan, N.T., HK

Tel : +852- 3618 9188 Fax: +852- 3590 9009 Website: www.lux-rack.com
Copyright Lux Rack Solutions Limited. All right reserved.

EMX SMART RACK CONTROLLER

COMPREHENSIVE RACK MONITORING

Every data center has some method of monitoring temperature even if it is just a thermometer or a thermostat on a data center wall. But today, that is hardly considered a best practice. The American Society of Heating, Refrigerating and Air-Conditioning Engineers (ASHRAE) recommends measuring the cool air entering IT equipment near the bottom, in the middle and near the top of each IT rack.

Today, many data center managers want to equip their racks with ways to detect water, smoke or when a cabinet door is opened. Some want to install cameras for security so they can spot changes or remotely view the physical environment.

Now it is easy to add simplified yet comprehensive environment monitoring to your IT racks. Raritan's EMX offers up to eight Raritan sensor ports, eight feature ports for Raritan's dynamic asset-tracking solution, and eight RS-485 ports, all in a 1U form factor.

WHY DO YOU NEED RACK MONITORING?

- Do you want real-time, accurate visibility into your IT asset management inventory?
- Do you want to install temperature sensors at your rack in accordance with ASHRAE guidelines?
- Do you want to locate a USB webcam at your rack?
- Do you want to instrument your rack with contact closure sensors so you can detect when a cabinet door has been opened?
- Do you want to aggregate, report and analyze sensor data across all your data center racks globally?

Model	Package Description
EMX2-111	Smart rack controller with 1 RJ-12 sensor port, 1 RJ-45 feature port for AMS, 1 RJ-45 RS-485 port, 1 USB-A port, 1 USB-B port, 1 RJ-45 Ethernet port, 1 DB-9M console/modem, LCD display
EMX2-888	Smart rack controller with 8 RJ-12 sensor ports, 8 RJ-45 feature ports for AMS, 8 RJ-45 RS-485 ports, 2 USB-A ports, 1 USB-B port, 1 RJ-45 Ethernet port, 1 DB-9M console/ modem, 2 contact closure, LCD display

HOW DOES IT WORK?

The Raritan EMX is a central connection point for all of Raritan's environment sensors. The EMX LCD display and remote GUI provide access to sensor readings, including temperature, humidity, asset tags, airflow, air pressure and contact closure. These readings can be viewed with a web browser or the information can be passed on to energy management and monitoring software tools.

With the asset management capability, you can remotely track IT equipment locations after tagging the IT devices electronically. This feature is especially useful when there are hundreds of IT devices to administer. The asset management solution includes:

- Raritan Asset Management Tags (AMT): An electronic asset tag with a unique ID attaches to an IT device
- Raritan Asset Management Sensors (AMS): The asset sensors mounted on your racks monitor and provide location information on each asset
- Raritan EMX: A Web-based EMX GUI allows you to remotely see the location of each IT device

With a webcam connected to the EMX USB port, you can remotely view real-time images or video inside the data center from anywhere. The USB port can also support other USB devices like Wi-Fi networking. A standards-based SNMP interface can be used by any third-party data center management system. The SNMP interface offers the following features:

- Support for SNMPv1, v2 and v3 GETs/SETs/TRAPs
- The ability to configure and set values like thresholds through SNMP and receive TRAPs when sensors cross set points
- Read all asset tag IDs per rack and their physical location
- Receive TRAPs in case an asset tag is added, removed or moved
- Set an RGB color LED indicator for each rack unit ("U") slot on the AMS. This can be used to implement a custom color indicator-controlled change management process, e.g., a red, blinking LED indicates a server replacement request

POWERIQ ENERGYMANAGEMENTSOFTWARE

Using Raritan's environment sensors, EMX acts as a gateway to feed data such as temperature, humidity, airflow, air pressure and contact closure information to energy management and data center monitoring software. You can create a variety of reports and charts and get alerts when thresholds are crossed. With the unique cooling charts you can understand if you are compliant with manufacturers' and industry-accepted recommendations, and project how much you can save by increasing room ambient temperatures.

Address: Unit 05, 12/F, Block A, Hi-Tech Industrial Centre, 5-21 Pak Tin Par Street, Tsuen Wan, N.T., HK

Tel : +852- 3618 9188 Fax: +852- 3590 9009 Website: www.lux-rack.com
Copyright Lux Rack Solutions Limited. All right reserved.

LUX RACK SOLUTIONS

Raritan
A brand of legrand

SMARTSENSORS

MONITOR YOUR DATA CENTER WITH RARITAN'S PLUG-AND-PLAY SENSORS

SmartSensor is a comprehensive set of environmental sensors that deliver accurate data providing insights into your data center's environment. The advanced feature set allows for easy deployment, clear identification of hot spots, and better airflow management. SmartSensors models are available for monitoring temperature, humidity, airflow, air pressure, water/leaks, contact closures proximity detection, vibration and more.

All environmental data collected by the sensor can be sent to any DCIM Monitoring software to provide a complete picture of data center conditions at the rack, aisle, and facility level. Real-time alerts of potential threats in your environment are also sent to administrators for fast resolution.

With Raritan's SmartSensors, adding environmental monitoring to your existing infrastructure is easier and more cost-effective than ever before. Setting the new standard for easy data center deployment with its plug-and-play connection to any Raritan power device including PX intelligent rack PDU series, EMX smart rack controllers, PX inline meters, rack transfer switches, and branch circuit monitors

EASY COMPLIANCE WITH ENVIRONMENTAL STANDARDS (ANSI/ASHRAE)

Environment Sensors are one of the most useful tools needed to accurately report on all critical environmental conditions impacting your IT equipment and to make decisions to comply with ASHRAE environmental standards.

SmartSensors facilitate the collection of key environmental data and provide a more efficient deployment and management experience by pushing data into any DCIM or BMS software, through the Xerus Technology platform, already built in Raritan Products.

INNOVATIVE FEATURES

RJ45, REMOVABLE SENSOR HEADS
If sensor accuracy diminishes, you don't need to remove the entire sensor; just replace the sensor head to maintain a high degree of accuracy

LED INDICATOR
If sensor accuracy diminishes, you don't need to remove the entire sensor; just replace the sensor head to maintain a high degree of accuracy

SINGLE BUS/STRING TECHNOLOGY

Offering the highest flexibility of deployment by the standard sensor cord or any Cat 5/6-type cable connection, the SmartSensor allows you to cascade up to 32 sensors through a single bus. The SmartSensor makes it easy to instrument entire rows of your data center with different types of sensors through a single control device.

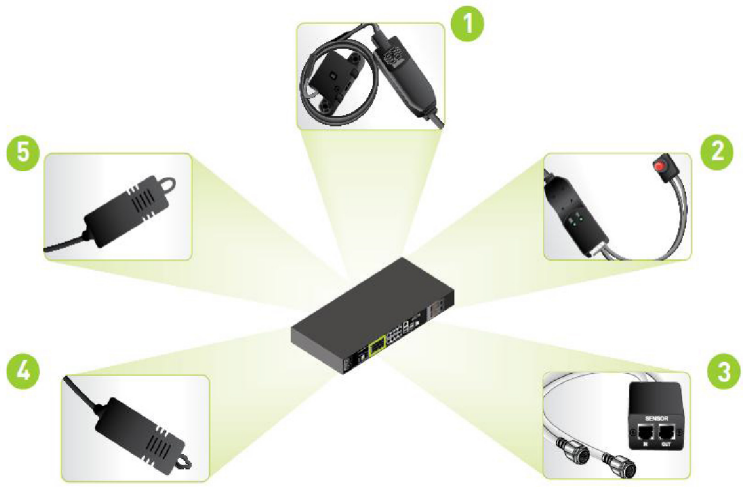

1 Single airflow sensor
2 Dual contact closure sensor
3 single combo differential pressure
4 Single combo temperature and humidity sensors
5 Single temperature sensor

SMARTSENSOR BENEFITS FEATURES

- Accurate monitoring of various conditions in your environment: temperate, humidity, airflow, air pressure, water leaks, and vibrations
- Save on cooling by confidently raising data center temperatures
- Check airflow and air pressure to and from racks to prevent hot spots and bypass recirculation
- Improve data center uptime by receiving environment alerts to prevent hot spots, bypass airflow and recirculation
- Make smarter rack management decisions based on factual environmental insights
- Easily install plug-and-play sensors
- without disrupting operations

HIGH-ACCURACY AND HIGH-RELIABILITY METERING

All SmartSensors benefit from the latest, most high-tech metering components, with an MTBF of more than 20 years per sensor. SmartSensor delivers the highest metering accuracy at +/- 0.2°Cfor temperature sensors, +/-1.8% for relative humidity.

Address: Unit 05, 12/F, Block A, Hi-Tech Industrial Centre, 5-21 Pak Tin Par Street, Tsuen Wan, N.T., HK

Tel : +852- 3618 9188 Fax: +852- 3590 9009 Website: www.lux-rack.com
Copyright Lux Rack Solutions Limited. All right reserved.

Product	Part Number	Description	Ranges	
Temperature	DX2-T1	Single temperature sensor, field replaceable sensor module, 10ft (3m) cable, RJ-45 connector.	-25C to +75C	+/- 0.3C
Temperature and Humidity	DX2-T1H1	Single combo temperature and humidity sensor, field replaceable sensor modules, standard 13ft (4m) cable, Standard CAT5/6 compatible, RJ-45 connector.	-25C to +75C,0% RH to 100% RH	+/- 0.3C / RH +/- 2.5%
Temperature and Humidity	DX2-T2H2	Dual combo temperature and humidity sensors, 10ft (3m) standard cable from RJ-45 connector to combined temperature/humidity sensor, additional 10ft (3m) cable to second combined temperature/humidity sensor (total length 20ft/6m).	-40C to +85C, 0% RH to 100% RH	+/- 0.3C,+/- 2.5% RH @ 25C
Temperature and Humidity	DX2-T3H1	Three temperature sensors, middle sensor supporting humidity (four sensors total in three housings), field replaceable sensor modules, 13ft (4m) standard cable from RJ-45 connector to first sensor, 3ft (1m) between first and second and second and third sensor housings. Compatible with standard CAT5/6 cable.	-25C to +75C,0% RH to 100% RH	+/- 0.3C / RH +/- 2.5%
Airflow Management	*DX2-AF1	Single airflow sensor, 10ft (3m) cable, RJ-45 connector.	0 to 4m/s (787 LFM)	+/- 10%
Differential Pressure	*DX2-T1DP1	Single combo differential air pressure and temperature sensor, 10ft (3m) cable, RJ-45 connector.	0 to 125 Pa, -25C to +125C with 0.03C resolution	+/- 1.5%
Contact Closure	DX2-CC2	2 Contact Closure Sensor for connection and management 3rd party sensors (Smoke, sound, etc.)	N/A	N/A
Water/Leak Sensor	DX-WSF-KIT	Floor water/leak sensor plus contact closure sensor, RJ-12 connector.	N/A	N/A
Water/Leak Sensor	DX-WSC-35-KIT	11.5ft (3.5m) rope water/leak sensor plus contact closure sensor, RJ-12 connector.	N/A	N/A
Water/Leak Sensor	DX-WSC-70-KIT	23ft (7.0m) rope water/leak sensor plus contact closure sensor, RJ-12 connector.	N/A	N/A
Vibration Sensor	DX-VBR	Vibration sensor that detects acceleration along three axes (x, y, z). RJ-45 connector.	0 to 3.64g	0.01g
Sensor Hub Expander	DPX-ENVHUB2	Two-port (1x2) hub to expand RJ-12 sensor ports, comes with mounting bracket and RJ-12-to-RJ-12 cable to connect to, and receive power from, PX and EMX products.	N/A	N/A
Sensor Hub	DPX3-ENVHUB4	Four-port (1x4) hub to expand RJ-45 sensor ports, comes with mounting bracket.	N/A	N/A
Contact	DX-PD2C5	wo active dry contacts powered by 12V to support door locks. Five digital Normally Closed (NC) or Normally Open (NO) contact closures which require customer-provided NC or NO switches, e.g. door open/close, smoke present/absent, etc. Each of the five ports (channels) can be independently set to NC or NO, factory default is NC, RJ-45 connector (Not supported by DPX, PX or PX2 models).	N/A	N/A
Proximity	DX-PIR	Digital proximity sensor which detects motion around a cabinet, RJ-45 connector (Not supported by DPX, PX or PX2 models).	N/A	N/A

Address: Unit 05, 12/F, Block A, Hi-Tech Industrial Centre, 5-21 Pak Tin Par Street, Tsuen Wan, N.T., HK

Tel : +852- 3618 9188 Fax: +852- 3590 9009 Website: www.lux-rack.com
Copyright Lux Rack Solutions Limited. All right reserved.

IT RACK SOLUTIONS

Lux Rack offers a comprehensive range of cabinets, racks, enclosures, cold aisle containment and cable management solutions for Datacom & Telecom. Our high quality products and applications address challenge of cable management, cooling, energy saving, space utilization and scalability.

We realize that every project is unique, therefore we provide cabinets & racks customization and advisory services for optimizing the overall utilities.

All are compatible with 19" EIA/ECA-310 standard and available in several of dimensions and static loadings. Over 80% ventilation rate of perforated doors for optimizing air flow and improve the cooling efficiency as standard offer.

IT racks are made of cold steel or aluminum with supreme black (or other colors) powder coating for protection from scratch and rust.
All IT racks are providing flexibility and scalability for future integration with cable basket, fiber raceway and aisle solutions.

SPECIFICATIONS

Products:	Floorstandcabinets 12U, 15U, 19U, 21U, 22U, 32U, 37U, 42U, 45U, 47U, 48U, 50U, 52U height 800kg, 1200kg,1600kg and 2,000kg static loading Wall mountcabinets 2U, 4U, 9U, 12U and 16U height / 60kg static loading Available in other height
Color:	Black power coating / Or other colors
Frameworks:	SPCC with multi-folded (standard)
Front, Rear & Side Supporting Channel:	SPCC (standard)
Front & Rear 19" Mounting Channel:	Adjustable front & rear vertical channels with U marking; Available in tool less adjustable design
Front Door:	SPCC ; 80 % Perforation rated with hexangular hole ; 3 points handle key lock; Single or Double Door * available in front glass door
Rear Door:	SPCC ; 80 % Perforation rated with hexangular hole ; 3 points handle key lock ; Single or Double Door * available in rear glass door
Side Door:	SPCC ; Quick release lockable side panel; Option with keylock
Top Panel:	SPCC ; Cable entry with various size and with blank plate to seal the cable entry Available with roof mount fan units
Bottom Panel:	SPCC ; Cable entry with various size and with blank plate to seal the cable entry
Others:	Castor & leveling feet x 4pcs Earthing kit x 1set M6 fixing screws & nuts x 50pcs

Address: Unit 05, 12/F, Block A, Hi-Tech Industrial Centre, 5-21 Pak Tin Par Street, Tsuen Wan, N.T., HK

Tel : +852- 3618 9188 Fax: +852- 3590 9009 Website: www.lux-rack.com
Copyright Lux Rack Solutions Limited. All right reserved.

IT RACK SOLUTIONS

ACCESSORIES

Other accessories are also available

- PDU
- Fixed and Sliding Shelves
- Cable Management
- Air Flow Management

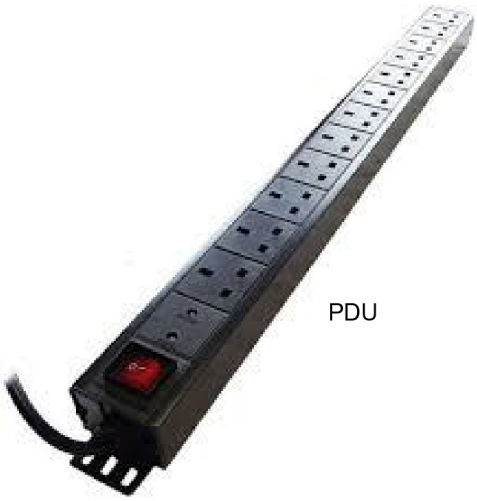

PDU

Sliding Shelf

Strip Brush

Blank Panel

ORDERING PART NUMBER

Example: TR-CB37U66TR = 37U Cabinet, TR Series 600(W) x1070 (D), 1000kg Loading

Character	T	R	–	A	B	C	D	E	F	G
Example	T	R	–	3	7	U	6	7	T	R

Series

LX Series up to 2000kg static loading

TR Series only up to 1000kg static loading

ABC –HEIGHT (U)

37U = 37U
42U = 42U
45U = 45U
47U = 47U
48U = 48U
50U = 50U
52U = 52U

(Example)

DE –DIMENSIONS
D = Width (W) ; E = Depth (D)

66 = 600(W) x 600(D)
68 = 600(W) x 800(D)
61 = 600(W) x 1000(D)
67 = 600(W) x 1070(D)
6A = 600(W) x 1100(D)
62 = 600(W) x 1200(D)
(Example)

600(W), 700(W) and 800(W) are available

FG –LOADING

SD = Standard, 800kg Loading
TR = 1000kg loading
HV = Heavy Duty, 1200kg Loading
SV = Server Rack, 1600kg Loading
UT = Ultra Loading, 2,000kg
(Example)

Address: Unit 05, 12/F, Block A, Hi-Tech Industrial Centre, 5-21 Pak Tin Par Street, Tsuen Wan, N.T., HK

Tel : +852- 3618 9188 Fax: +852- 3590 9009 Website: www.lux-rack.com
Copyright Lux Rack Solutions Limited. All right reserved.

COLD AISLE CONTAINMENT SOLUTIONS

We offer the standard and customization of cold aisle containment solutions that help to reduce the energy consumption by eliminating the mixing of hot and cold air in the data center.

Our solutions easily adapt to challenges such as limited ceiling height and limited headroom conditions. The cold aisle containment is designed on modular type and fully compatible with our IT racks in rows based. Our cold aisle containment is also able to fixed on third parties' standard IT racks.

Dual sliding door, roof panel and filler panel are main components to construct the cold aisle containment solutions. The panel roof system is designed with fail safe feature that work under the fire suppression system and allow for auto flip when triggered by fire alarm system or systems. Other air-flow management accessories are also available to maximum the cooling and power efficiency of the solutions.

If the standard cold aisle containment solutions are not suitable your data center environment, we also provide the customized solutions based on your requirement.

COLD AISLE CONTAINMENT FEATURES

- Modular design allowing expansion
- Additional mounting or fixing kits not required
- Easy and fast deployment
- Fail safe design for roof system
- Available on automatic or manual dual sliding door
- Eliminating hot spots

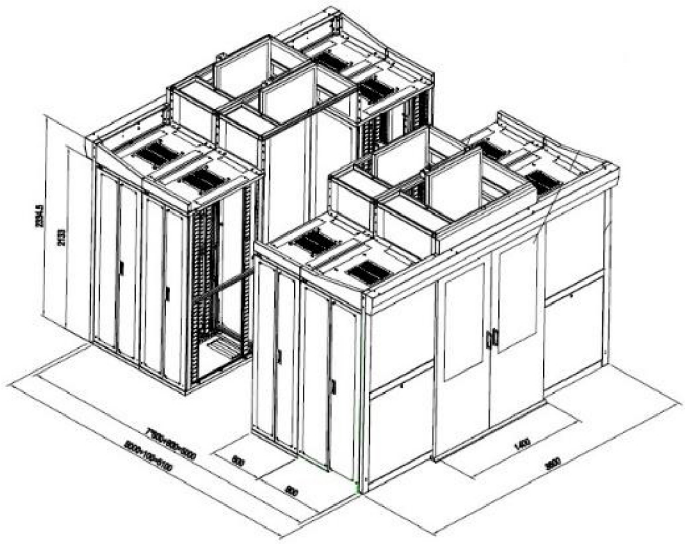

DUAL SLIDING DOOR

- Available in 37U, 42U 45U and 47U or other heights
- Steel or aluminum
- Automatic or manual door
- Digital or keyed lock
- Clear panels for better visibility
- Black or other colors coating

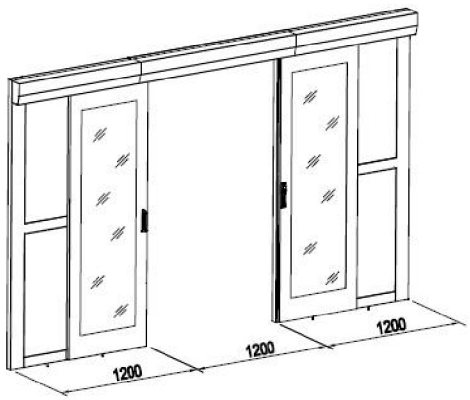

Address: Unit 05, 12/F, Block A, Hi-Tech Industrial Centre, 5-21 Pak Tin Par Street, Tsuen Wan, N.T., HK

Tel : +852- 3618 9188 Fax: +852- 3590 9009 Website: www.lux-rack.com
Copyright Lux Rack Solutions Limited. All right reserved.

COLD AISLE CONTAINMENT SOLUTIONS

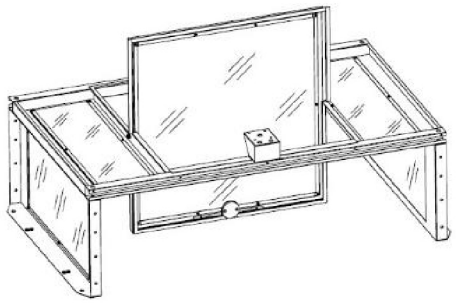

FILLER PANEL

- For uneven aisle ends or space missing cabinet
- Available for floor stand and easy attach to cabinets
- Available in 37U, 42U 45U and 47U heights or other heights
- Available in 600mm and 800mm width
- Black or other colors coating

ROOF PANEL

- Steel or aluminum
- Fail safe roof panel system allowing to work under fire suppression system
- Clear panels for light transmissibility
- Available for 600mm and 800mm width
- Fit for 1200mm aisle
- Black coating

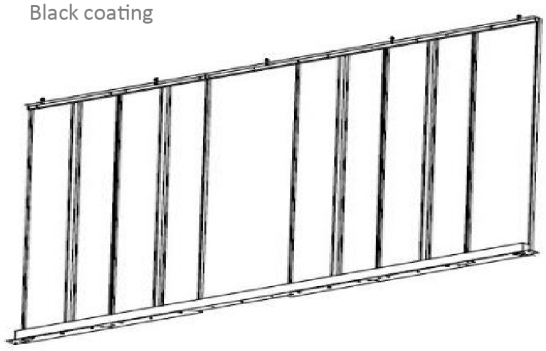

ORDERING PART NUMBER

Example: CAC-37UAD = Cold aisle containment, 37U, 1200mm, Automatic Dual

Character	C	A	C	–	A	B	C	D	E
Example	C	A	C	–	3	7	U	A	D

ABC –HEIGHT (U) & WIDTH (MM)

37U = 37U, 1200mm
42U = 42U, 1200mm
45U = 45U, 1200mm
47U = 47U, 1200mm
600 = 600mm (Roof Panel Only)
800 = 800mm (Roof Panel Only)

DE –DESCRIPTION

AD = Automatic Dual
MD = Manual Dual
RP = Roof Panel

ORDERING PART NUMBER

Example: Cold aisle containment, 37U, 600mm Filler panel

Character	C	A	C	–	A	B	C	D	E	F	F	P
Example	C	A	C	–	3	7	U	6	0	0	F	P

ABC –HEIGHT (U)

37U = 37U
42U = 42U
45U = 45U
47U =47U

DEF –WIDTH

600 = 600mm
800 = 800mm

Address: Unit 05, 12/F, Block A, Hi-Tech Industrial Centre, 5-21 Pak Tin Par Street, Tsuen Wan, N.T., HK

Tel : +852- 3618 9188 Fax: +852- 3590 9009 Website: www.lux-rack.com
Copyright Lux Rack Solutions Limited. All right reserved.

Lux Rack Solutions Limited

Unit 05, 12/F, Block A,
Hi-Tech Industrial Centre,
5-21 Pak Tin Par Street,
Tsuen Wan, New Territories,
Hong Kong

Tel: (852) 3618 9188
Email: sales@lux-rack.com
www.lux-rack.com